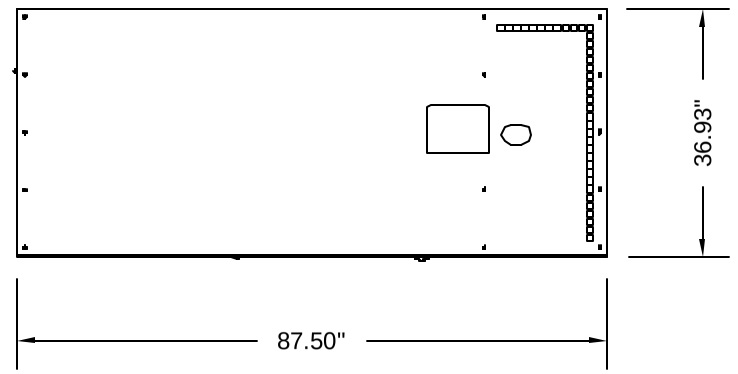

TOP VIEW

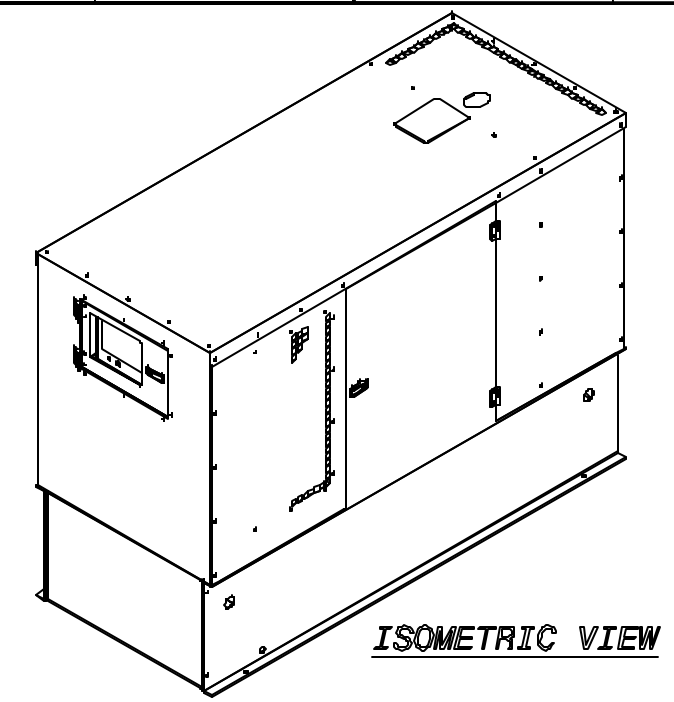

ISOMETRIC VIEW

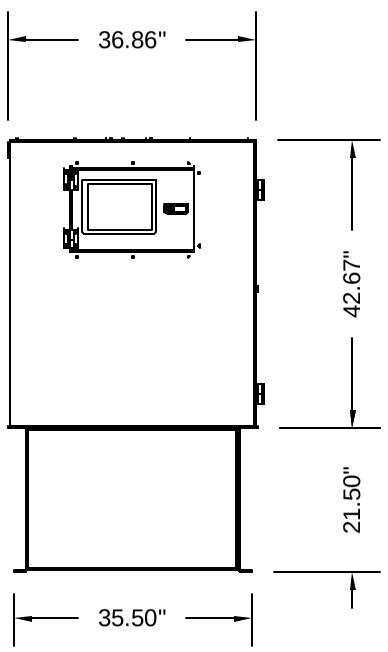

REAR VIEW

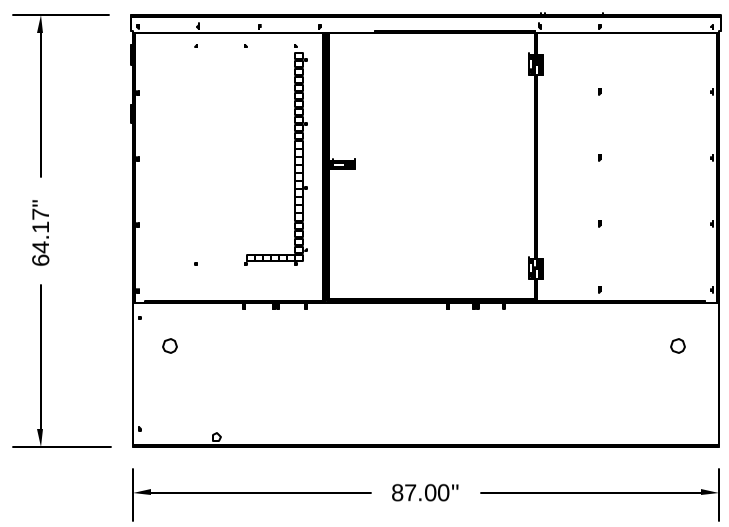

RIGHT SIDE VIEW

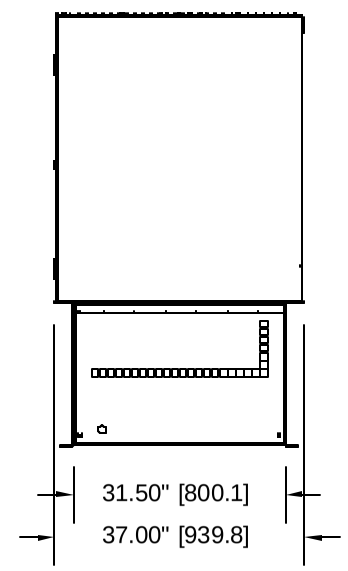

FRONT VIEW

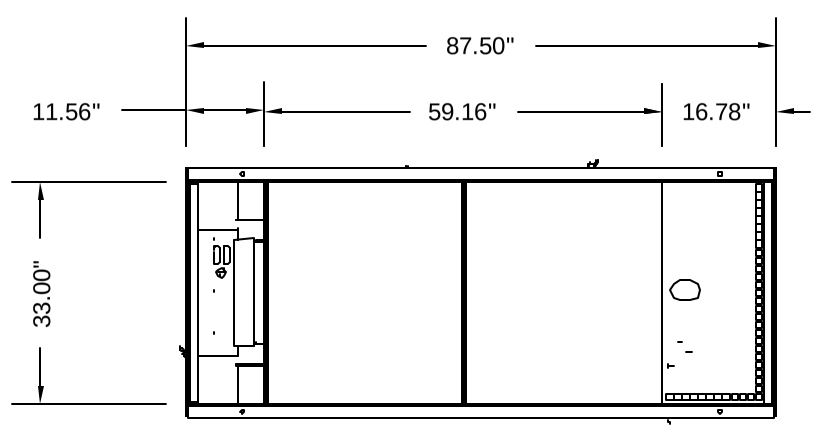

BOTTOM VIEW

THE INFORMATION CONTAINED HEREON IS CONFIDENTIAL INFORMATION
AND THE SOLE PROPERTY OF ARMSTRONG POWER TRADE
ANY USE, DUPLICATION, RETENTION, OR TRANSMITTAL TO OTHERS
WITHOUT WRITTEN PERMISSION OF ARMSTRONG POWER TRADE, IS PROHIBITED.
© ARMSTRONG POWER TRADE

UNLESS OTHERWISE SPECIFIED:

1. DIMENSIONS ARE IN INCHES
2. TOLERANCES:
   FRACTIONS ± X"
   DECIMALS .X ± X"
   .XX ± X"
   ANGLES ± X
   HOLE SIZES ± X"
   HOLE CENTERS ± X"

DO NOT SCALE DRAWING

DRAWING INTERPRETATION: ANSI Y14.5M

REV.	DATE		ZONE	DSGN	APPD
			MIA		

APPROVAL	DATE
DRWN: MK	03-25-08
DSGN:	
CHKD:	
APPD:	
CADD FOLDER: A30-40IV REV.2	
SCALE: NTS	

ARMSTRONG POWER SYSTEMS
Miami, FL USA

TITLE: INSTALLATION DRAWING - SHOWING EXTERIOR OF A30-40IV SOUND ATTENUATED ASSEMBLY WITH 150 GALLON SINGLE WALL FUEL TANK

SIZE: B | DRAWING NO. PART NO. A30-40IV - 150-1 | SHEET 1 OF 1 | REV.

(17x11)