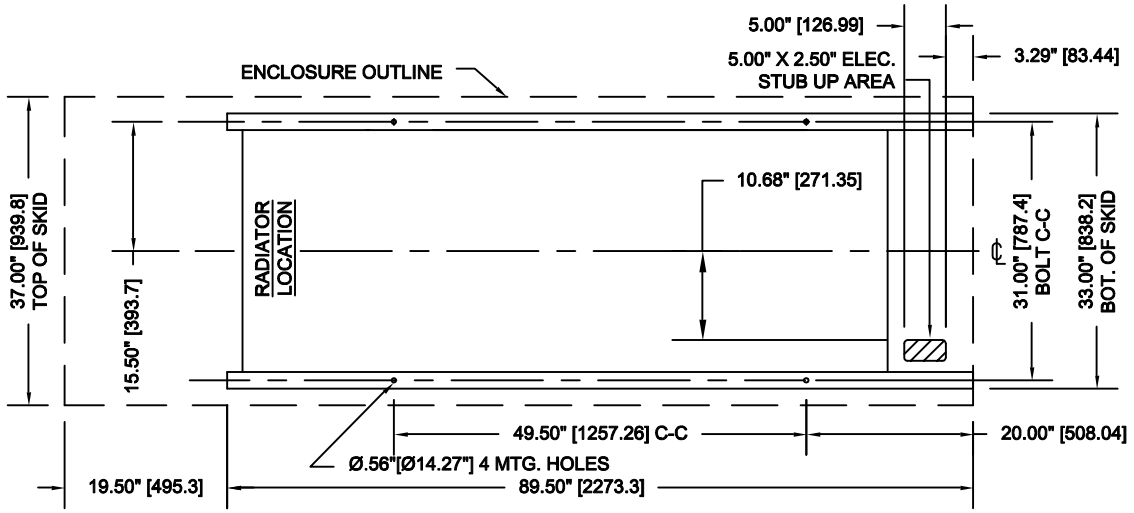

ENCLOSURE / GENERATOR FLOOR MTG. PLAN

ALLOW 38" AT SIDES OF ENCLOSURE FOR DOOR OPENINGS

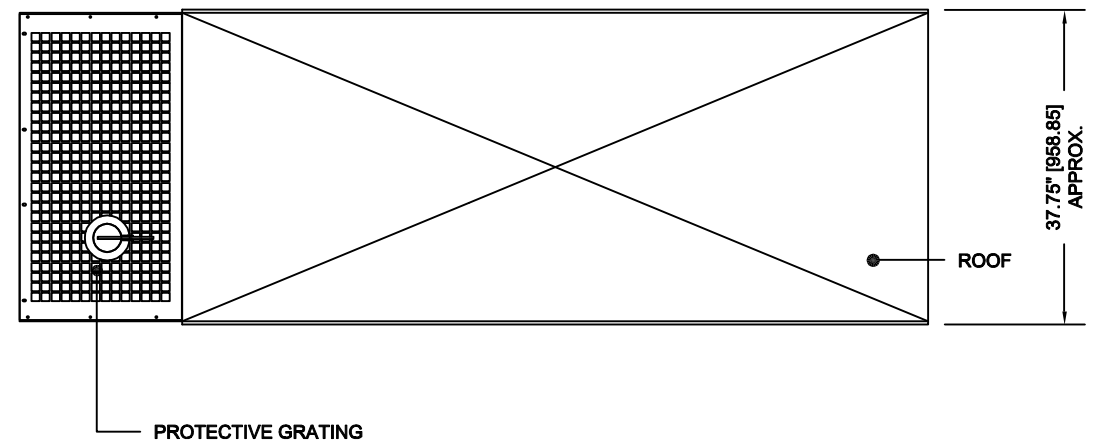

PLAN VIEW

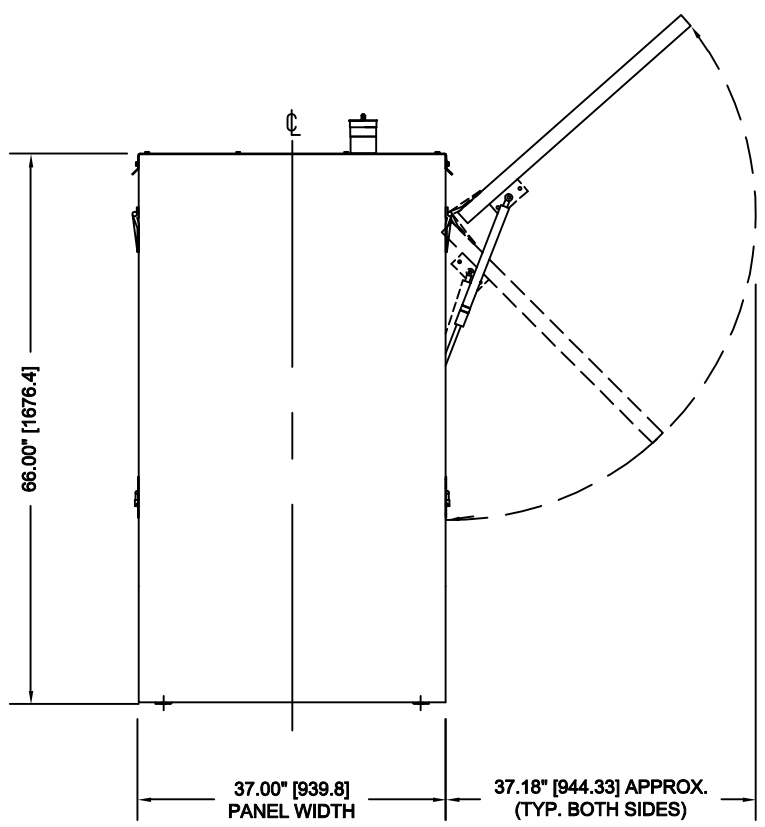

FRONT VIEW

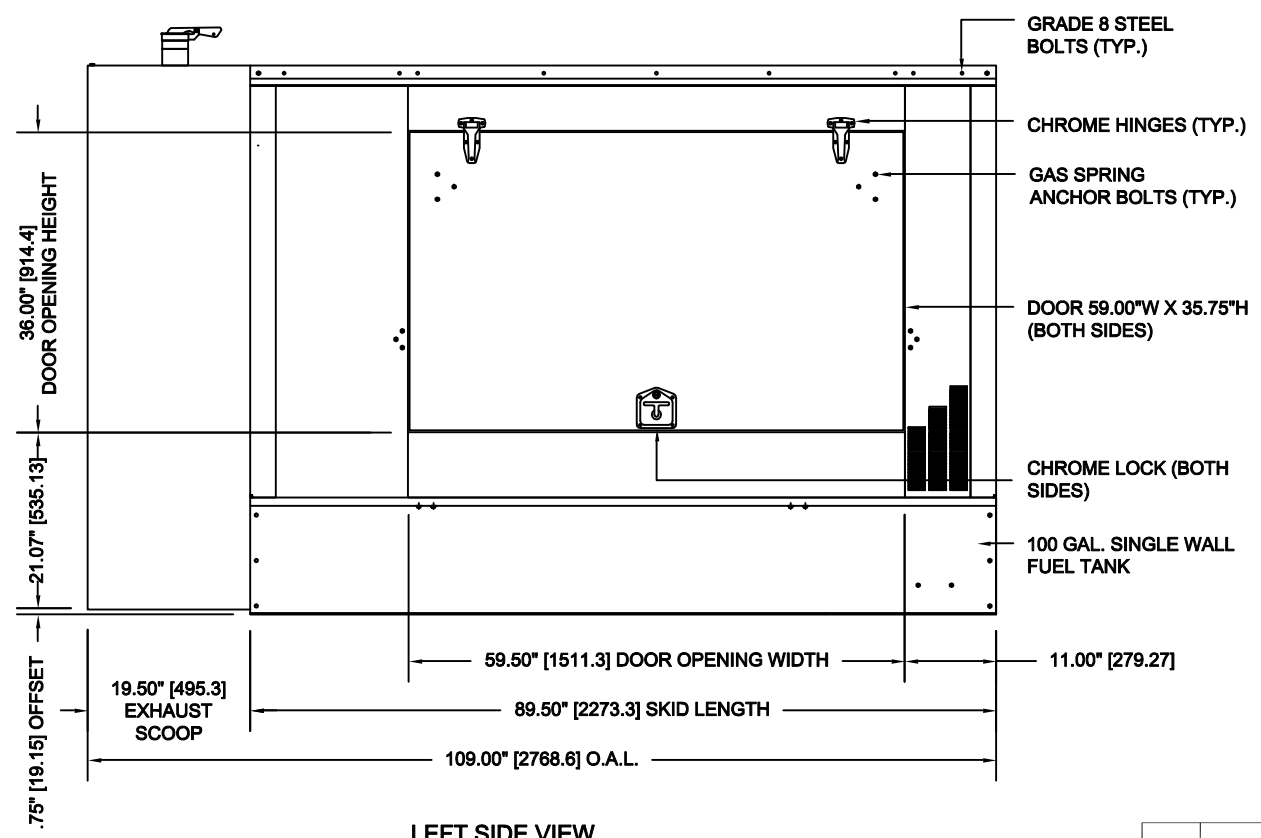

LEFT SIDE VIEW

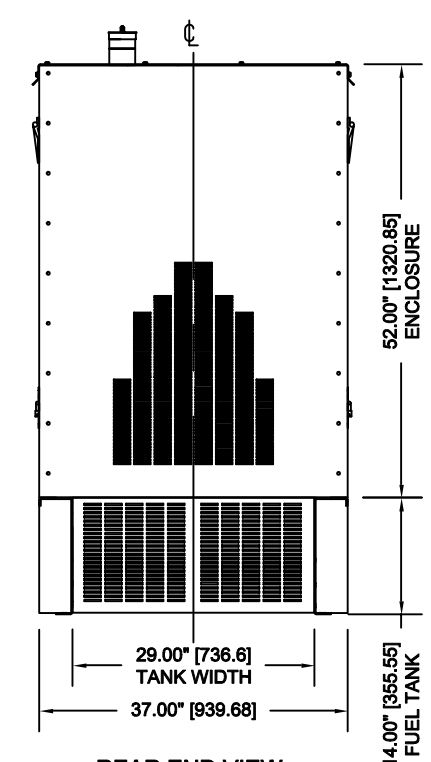

REAR END VIEW

THE INFORMATION CONTAINED HEREON IS CONFIDENTIAL INFORMATION AND THE SOLE PROPERTY OF ARMSTRONG POWER SYSTEMS, LLC. ANY USE, DUPLICATION, RETENTION, OR TRANSMITTAL TO OTHERS WITHOUT WRITTEN PERMISSION OF ARMSTRONG POWER SYSTEMS, LLC. IS PROHIBITED.
© ARMSTRONG POWER SYSTEMS, LLC.

NOTE
ELEC. - ELECTRICAL
ENCL - ENCLOSURE
O.A.W. - OVER ALL WIDTH
O.A.L. - OVER ALL LENGHT
DIMENSIONS IN [ ] ARE METRIC

REV.	DATE	DESCRIPTION	ZONE	DSGN	APPD
			MIA		

UNLESS OTHERWISE SPECIFIED:
1. DIMENSIONS ARE IN INCHES
2. TOLERANCES:
FRACTIONS ± X"
DECIMALS .X ± X"
.XX ± X"
ANGLES ± X
HOLE SIZES ± X"
HOLE CENTRES ± X"

DO NOT SCALE DRAWING

DRAWING INTERPRETATION: ANSI Y14.5 M

APPROVAL	DATE (MM/DY)
DRWN: MK	10-26-07
DSGN:	
CHKD:	
APPD:	
CADD FOLDER: ACUM110	
SCALE: NTS	

ARMSTRONG POWER SYSTEMS
Miami, FL, USA

TITLE: INSTALLATION DRAWING - SHOWING EXTERIOR ACUM110 WITH 100 GAL SINGLE WALL FUEL TANK

SIZE: B | DRAWING NO. PART NO. ACUM110-274D-EU-100 | SHEET 1 OF 2 | REV.

B (17x11)